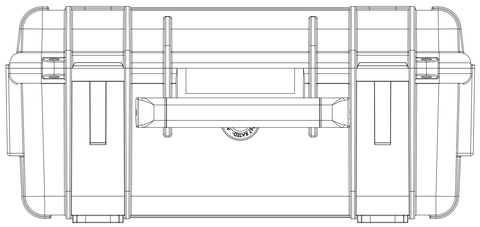

front view

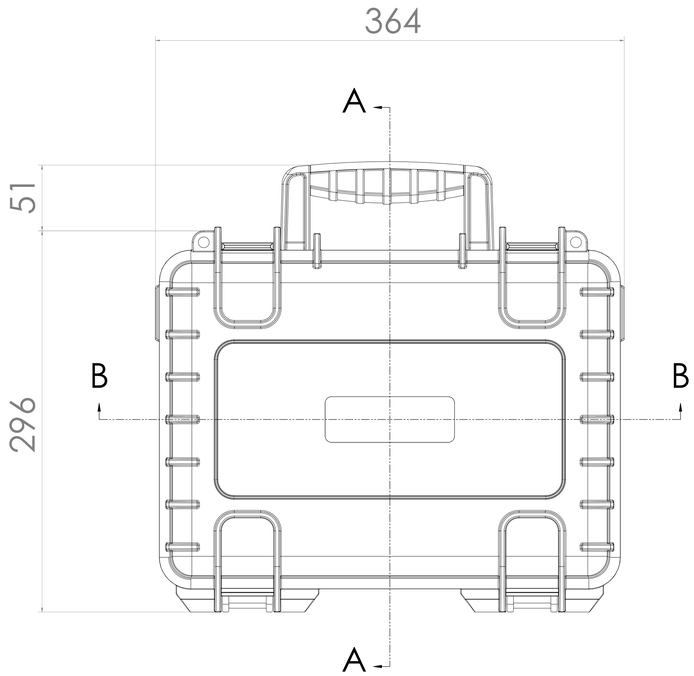

top view

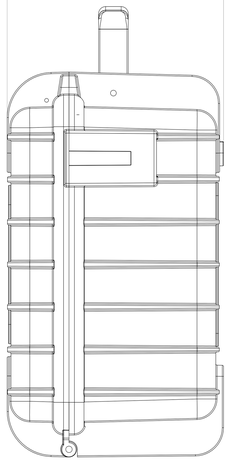

side view

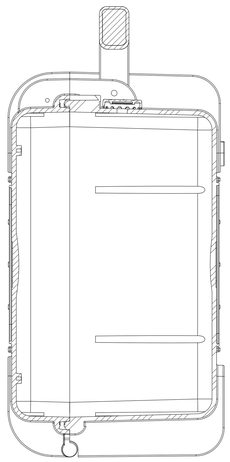

cut view A-A

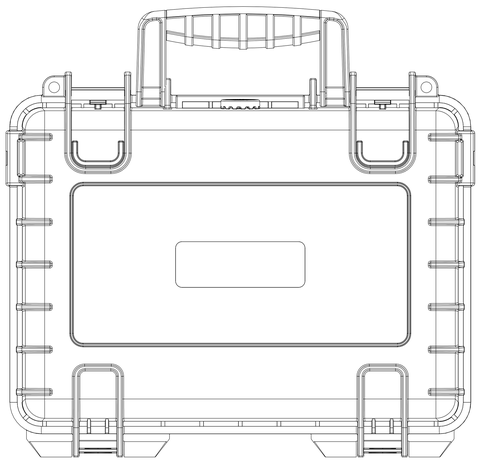

bottom view

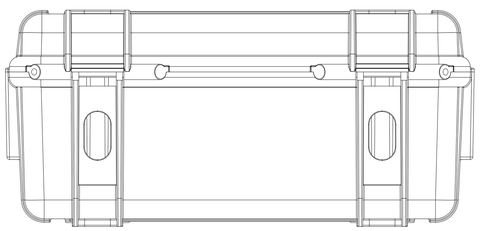

back view

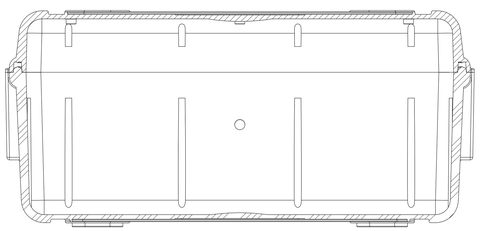

cut view B-B

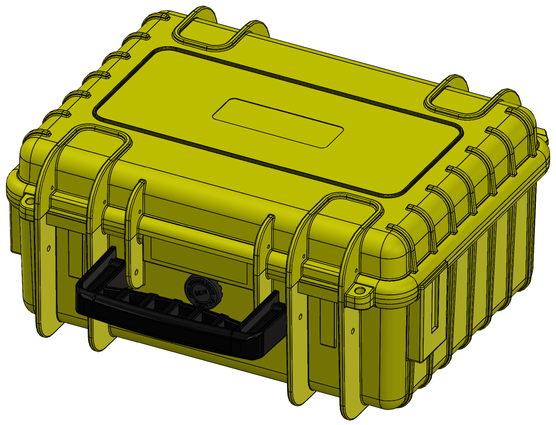

bw.case PP.117
Type 3000
fullscale

Cases of Success

dimensions may vary due to material shrinkage (max. 0,5%)

measurements in mm