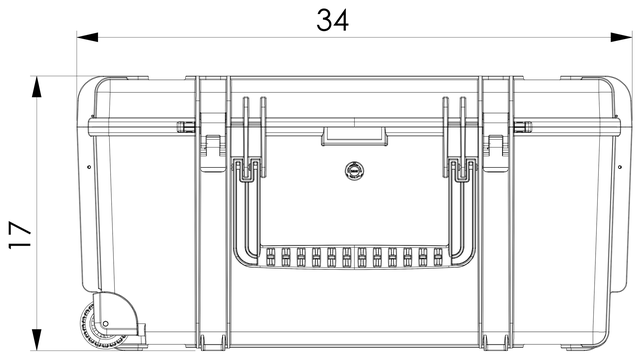

front view

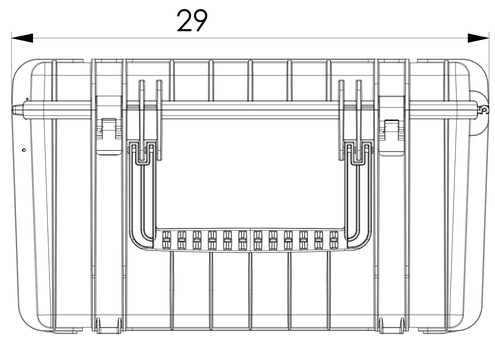

side view

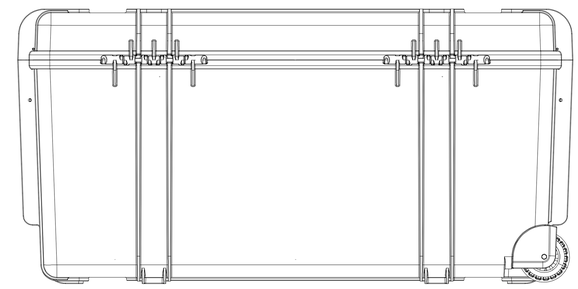

back view

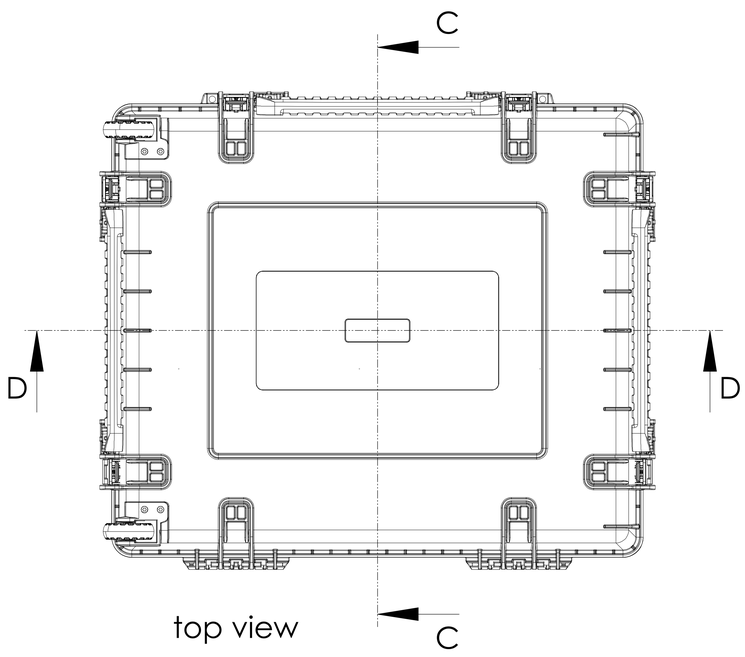

top view

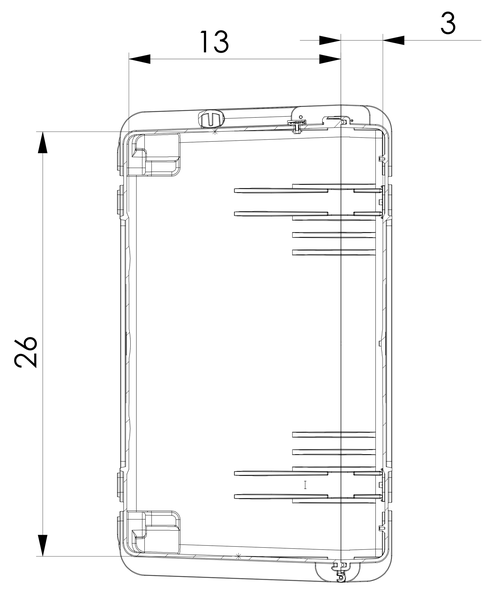

cut view C-C

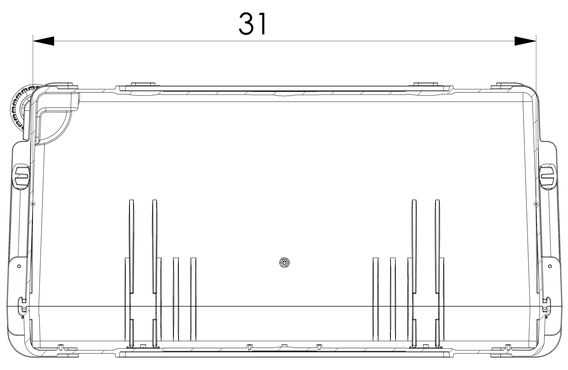

cut view D-D

Type 7900v08
1:2

dimensions may vary due to
material shrinkage (max. 0,5%)

measurements in inch